ZANUSSI PROFESSIONAL

Modular Cooking Range Line EVO700 400mm Gas Fry Top, Ribbed Brushed Chrome Plate

ITEM # _____

MODEL # _____

NAME # _____

SIS # _____

AIA # _____

372323 (Z7IILAAOMCA)	Half module gas fry top with ribbed brushed chrome cooking plate, sloped, thermostatic control, scraper included

Short Form Specification

Item No. _____

To be installed on open base installations or bridging supports. Ribbed cooking surface in brushed chrome. Suitable to be used with Natural or LPG gas. Temperature range from 100°C to 280°C. Removable drawer below the cooking surface for the collection of grease and fat. Exterior panels in stainless steel with Scotch Brite finish. One piece pressed work top in 1.5 mm thick stainless steel. Right-angled side edges to allow flush-fitting junction between units.

APPROVAL: _____

Main Features

- Unit to be mounted on open base cupboards, bridging supports or cantilever systems.
- Large drain hole on cooking surface permits the draining of fat into large 1 liter collector placed under the cooking surface.
- Large grease collection container available as optional accessory to be installed under top units over open base cupboard.
- Stainless steel high splash guard on the rear and sides of cooking surface. Splash guard can be easily removed for cleaning.
- Piezo spark ignition for added safety.
- Gas appliance supplied for use with natural or LPG gas, conversion jets supplied as standard.
- IPx4 water protection.
- Frontal simmering zone.
- Temperature range from 100° up to 280°C.
- Rough brushed chrome surface is highly resistant to scratches and facilitates cleaning operations at the end of the day.
- Scraper for ribbed plate included as standard.
- Suitable for countertop installation.

Construction

- Cooking surface completely ribbed.
- All exterior panels in Stainless Steel with Scotch Brite finishing.
- One piece pressed 1.5 mm work top in Stainless steel.
- Model has right-angled side edges to allow flush fitting joints between units, eliminating gaps and possible dirt traps.
- Cooking surface 12mm thick brushed chrome for optimum grilling results and ease of use.

Included Accessories

- 1 of Scraper for ribbed plate fry tops - kit includes knife blades for both smooth and ribbed surface PNC 206420

Optional Accessories

- Junction sealing kit PNC 206086 ❑
- Draught diverter, 120 mm diameter PNC 206126 ❑
- Matching ring for flue condenser, 120 -130 mm diameter PNC 206127 ❑
- Support for bridge type installation, 800 mm PNC 206137 ❑
- Support for bridge type installation, 1000 mm PNC 206138 ❑
- Support for bridge type installation, 1200 mm PNC 206139 ❑
- Support for bridge type installation, 1400 mm PNC 206140 ❑
- Support for bridge type installation, 1600 mm PNC 206141 ❑
- Support for bridge type installation, 400 mm PNC 206154 ❑
- Frontal handrail 400 mm PNC 206166 ❑
- Frontal handrail 800 mm PNC 206167 ❑
- Large handrail (portioning shelf) 400 mm PNC 206185 ❑
- Large handrail (portioning shelf) 800 mm PNC 206186 ❑
- Frontal handrail 1200 mm PNC 206191 ❑
- Frontal handrail 1600 mm PNC 206192 ❑
- Right and left side handrails PNC 206240 ❑
- Chimney upstand, 400 mm PNC 206303 ❑
- Flue condenser for 1/2 module, 120 mm diameter PNC 206310 ❑
- 2 side covering panels, height 250 mm, depth 700 mm PNC 206320 ❑
- Grease/oil container kit for frytops PNC 206346 ❑
- Chimney grid net, 400mm PNC 206400 ❑
- Scraper for ribbed plate fry tops - kit includes knife blades for both smooth and ribbed surface PNC 206420 ❑
- - NOT TRANSLATED - PNC 206455 ❑
- KIT G.25.3 (NL) GAS NOZZLES FOR 700 FRY TOPS PNC 206466 ❑
- Pressure regulator for gas units PNC 927225 ❑

The company reserves the right to make modifications to the products without prior notice. All information correct at time of printing.

Modular Cooking Range Line EVO700 400mm Gas Fry Top, Ribbed Brushed Chrome Plate

Front

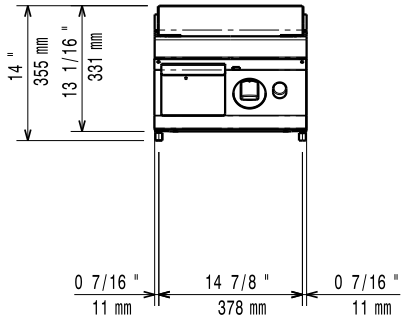

Side

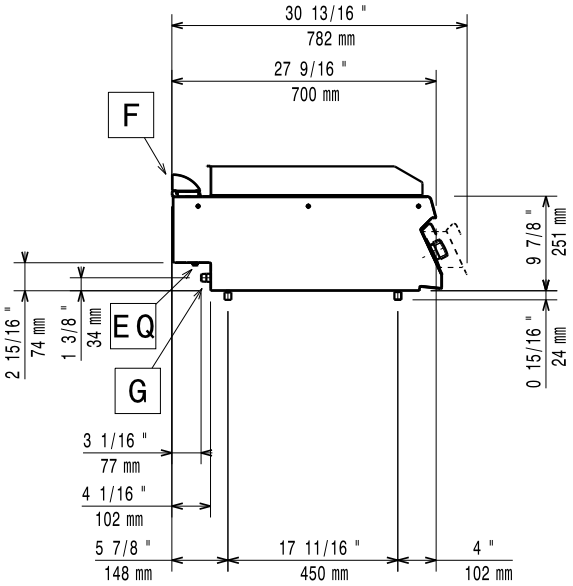

EQ = Equipotential screw
G = Gas connection

Top

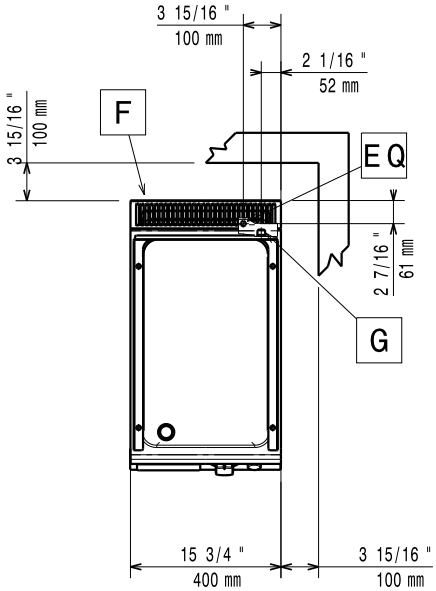

Gas

Gas Power:	7 kW
Standard gas delivery:	Natural Gas G20 (20mbar)
Gas Type Option:	LPG
Gas Inlet:	1/2"

Key Information:

If appliance is set up or next to or against temperature sensitive furniture or similar, a safety gap of approximately 150 mm should be maintained or some form of heat insulation fitted.

Working Temperature MIN:	100 °C
Working Temperature MAX:	280 °C
External dimensions, Width:	400 mm
External dimensions, Depth:	700 mm
External dimensions, Height:	250 mm
Net weight:	40 kg
Shipping weight:	43 kg
Shipping height:	540 mm
Shipping width:	460 mm
Shipping depth:	820 mm
Shipping volume:	0.2 m³
Cooking surface width:	330 mm
Cooking surface depth:	540 mm

The company reserves the right to make modifications to the products without prior notice. All information correct at time of printing.

2026.04.06